Figure 1: PFD of Gas Processing Plant for Ethane Recovery

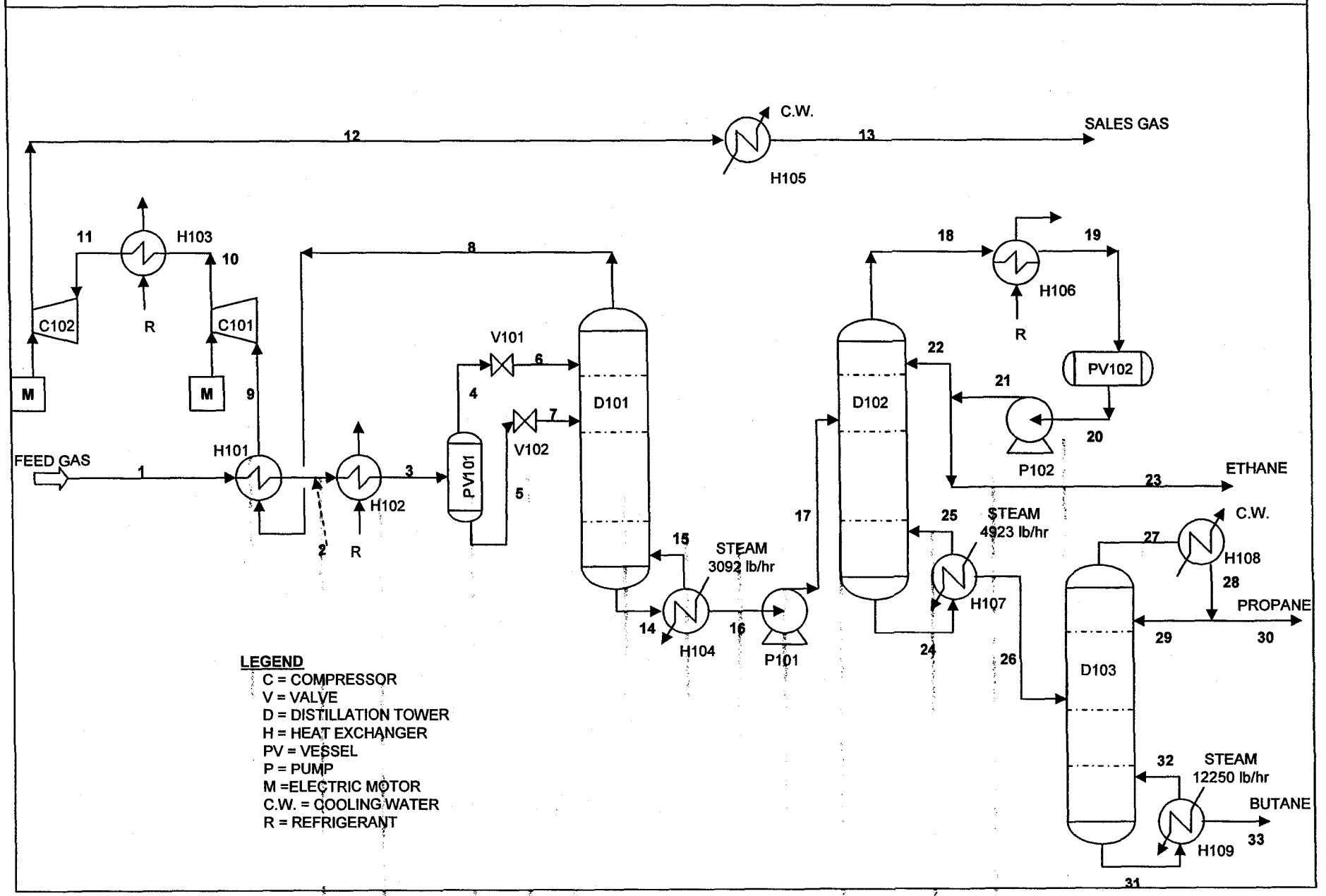

DJW 9.06