CM 3230
Fall 2011
Exam 1

Name _____

1. (25 pts) 10 moles of an ideal gas having heat capacity $C_P = 3R/2$ is expanded adiabatically but <u>irreversibly</u> against a constant external pressure until its pressure reaches the same value as the external pressure. What is the change in entropy (in J/K) of the gas if the initial pressure is twice the external pressure.

2. (25 pts) Three blocks made of different materials initially at different temperature were put in contact with each other until they all reach the same temperature. Assuming no heat was lost to or gained from the surroundings, determine the change in entropy (in J/K) for the process given the data in Table 1.

Table 1. Data for problem 2.

Metal	Moles	$C_v \left(\frac{J}{mol\ °C}\right)$	Initial temperature
A	10	$2R$	$300K$
B	5	$3R$	$100K$
C	20	$2.5R$	$200K$

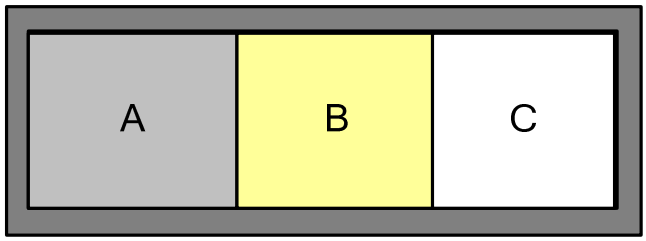

Figure 1. Three blocks.

3. (20 pts) 20 moles of ideal gas with heat capacity $C_P = 3R/2$ is used in a Carnot cycle shown in Figure 2, i.e. adiabatic expansion from point 1 to 2, followed by an isothermal compression to point 3, an adiabatic compression to point 4 then an isothermal expansion back to point 1. Determine the Carnot efficiency assuming the pressure at point 2 is 10% of the pressure at point 1, i.e. $P_1/P_2 = 10$.

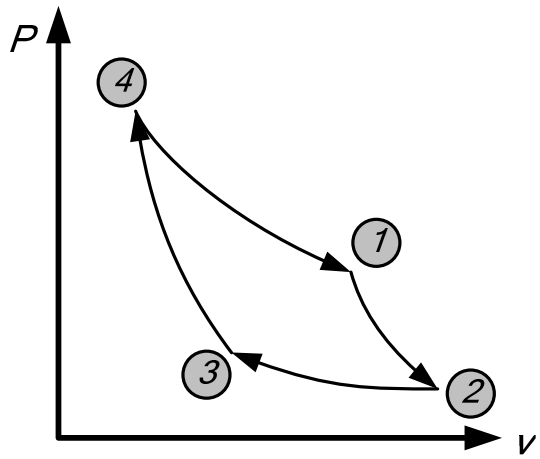

Figure 2. Carnot cycle.

4. (30 pts) Steam at $T_1 = 500°C$ and $P_1 = 30MPa$ flowing at a rate of 100 kg/s is expanded isentropically through the first turbine and exits at $T_2 = 275°C$. It then goes through a heat exchanger and gains heat at a rate of 10 kW. The heated stream then goes to another turbine and exits at $T_4 = 250°C$ with a quality of $x_4 = 0.85$. Find the power (in kW) delivered to each of the turbines (assuming no friction loss in the turbines).

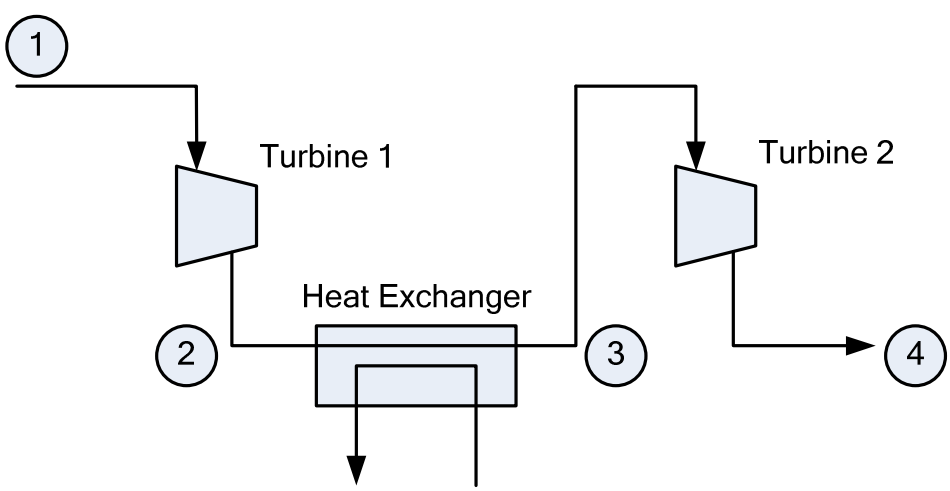

Figure 3. Two-turbine system with intermediate heating.