CM416. First Exam Part I
Dec. 14, 1995
6:30pm-8:30pm

1. (15 pts) Figure 1 shows a P&ID in which all five control valves are connected in an erroneous manner. Briefly describe five errors in the diagram (using only one sentence for each error).

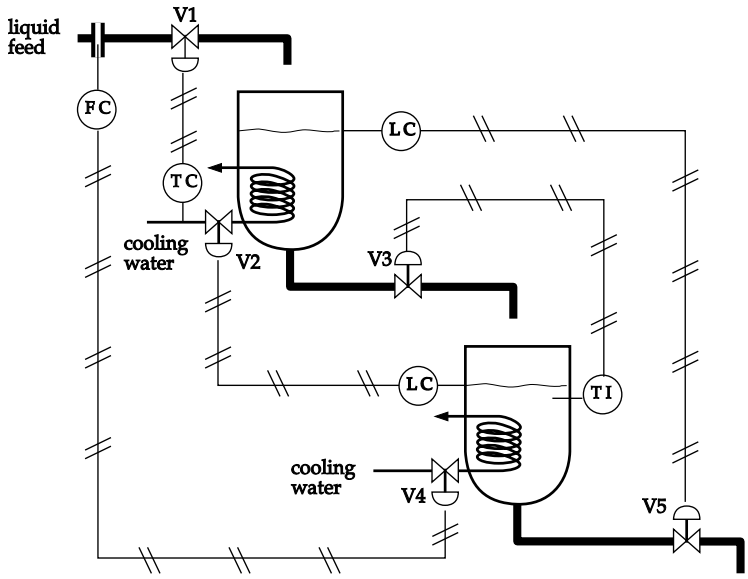

Figure 1: P&ID diagram containing at least five errors.

2. Figure 2 shows two isothermal pressure vessels which are connected in series. The pressure upstream of vessel 1 is held constant at P_o atm, while the pressure downstream of vessel 2 is held constant at P_3 atm. The relationship among the pressures are: $P_0 > P_1 > P_2 > P_3$. The mass flow rate of gas in each stream are:

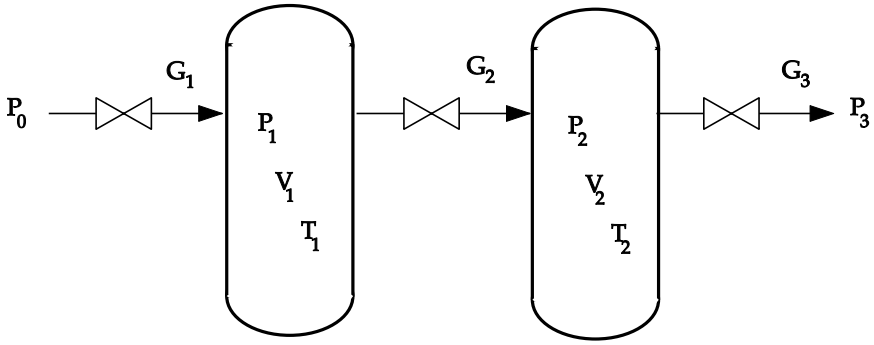

Figure 2: P&ID diagram containing at least five errors.

$$G_1 = k_1\sqrt{P_0 - P_1}$$

$$
\begin{aligned}
G_2 &= k_2\sqrt{P_1 - P_2} \\
G_3 &= k_3\sqrt{P_2 - P_3}
\end{aligned}
$$

(a) (20 pts) Obtain a dynamic process model for P_1 and P_2, assuming that the gas is ideal having a molecular weight MW.

(b) (15 pts) What are the steady state values of P_1 and P_2 ? Are the steady states P_{1s} and P_{2s} dependent on T and/or V ?

3. (25 pts) Let x and y be the mass fractions of components A and B in a CSTR. The dynamic models for x and y were obtained as

$$
\begin{aligned}
\frac{dx}{dt} &= \frac{1}{\tau}(x_{in} - x) - k_1 xy \\
\frac{dy}{dt} &= \frac{1}{\tau}(y_{in} - y) + k_1 xy - k_2 y
\end{aligned}
$$

Obtain a linearized model for x and y with $\tau = 10$, $k_1 = 2$ and $k_2 = 0.5$, around the steady state with $x_{ins} = 0.9$, $y_{ins} = 0.1$.